EASY® HOME

TRANSPORT CASTORS WITH PLASTIC TREAD, 4 PIECES

EASY HOME

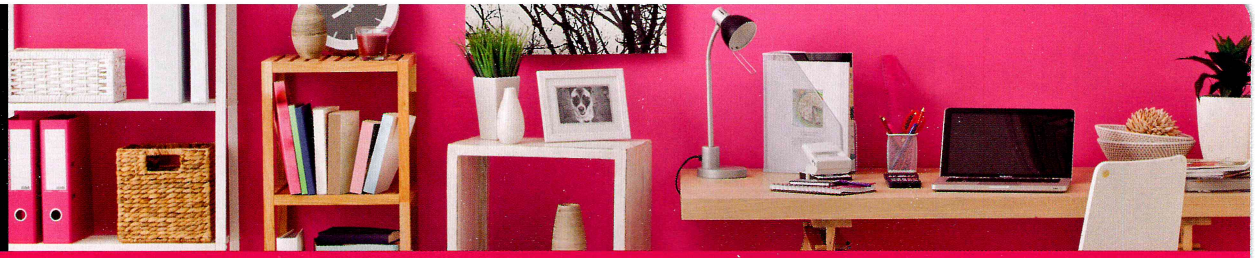

TRANSPORT CASTORS WITH PLASTIC TREAD, 4 PIECES

AUS

- 2 transport castors with mounting plate and brake
- 2 transport castors with mounting plate with joint
- Castors: Ø 75 mm, width: 28 mm
- Plate size: 70 x 60 mm
- Joints with ball-bearing
- Total height: 99.5 mm
- Total bearing capacity: 150 kg
- Suitable for soft surfaces such as carpet, PVC, linoleum

ALDI guarantees that our exclusive brand products are developed to our stringent quality specifications. If you are not entirely satisfied with this product, please return it to your nearest ALDI store, within 60 days from the date of purchase, for a full refund or replacement.

Made in China

EASYHOME® is a registered trademark of ALDI Stores

DISTRIBUTED BY:
ALDI STORES,
1 SARGENTS ROAD,
MINCHINBURY NSW 2770
www.aldi.com.au

20051907 CS16B

07/2017 94700

User Manual

EASY HOME

TRANSPORT CASTORS WITH PLASTIC TREAD, 4 PIECES

AUS

Made in China
EASY HOME® is a registered trademark of ALDI Stores
DISTRIBUTED BY:
ALDI STORES
1 SARGENTS ROAD
MINCHINBURY NSW 2770
www.aldi.com.au

Doc./Rev.No.19486S_20160203_setB_AUS

MANUAL DEVELOPED IN GERMANY hanse control www.hansecontrol.com User-friendly Manual ID: #05007

94700
MODEL: CS16B 07/2017

Safety

Proper use

The transport castors with plastic tread, 4 pieces (referred to as "castors" hereafter) are exclusively designed for making a board trolley or installing onto a heavy furniture bottom for easily moving around. The castors are only intended for private purposes, and they are suitable for soft surfaces, such as carpet, PVC and linoleum.

Only use the castors as described in this user manual. Any other use is deemed improper and may result in damage to property or even personal injury. The castors are not a toy for children.

The manufacturer or vendor cannot be held liable for damages incurred through improper or incorrect use.

Safety instructions

Read the user manual carefully before using the castors. Store the user manual for future use.

⚠ WARNING!

Risk of choking and suffocation!
If children swallow small parts or get caught in the packaging, they may choke or suffocate.

- Keep small parts and packaging away from children.
- Do not allow children to play with the castors.

⚠ CAUTION!

Risk of injury!
If you assemble or use the castors improperly, this may result in personal injury, or you may damage the castors.

- The castors may only be assembled by adults.
- The castors may only be used with adult supervision and ma not be used as a toy.
- Be careful not to trap your fingers while assembling the castors.
- Check regularly whether all screw connections are tight. If necessary, retighten the screws
- Ensure the correct stability has been achieved before using the castors.
- The maximum loading weight of each castor cannot exceed 50 kg (see **Fig. C**). The center loading capacity of a board trolley installed with the entire castors set is 150 kg.
- Make sure that a board trolley or furniture bottom with these castors is properly placed on a dry, solid, stable and horizontal ground (see **Fig. D** and **E**). Do not place the castors on a slope even if you have used the castor brakes.
- The castors cannot move with a speed more than 4 km/h (see **Fig. F**).
- Do not place the castors near any heat sources.
- Do not utilize these castors to load human beings.

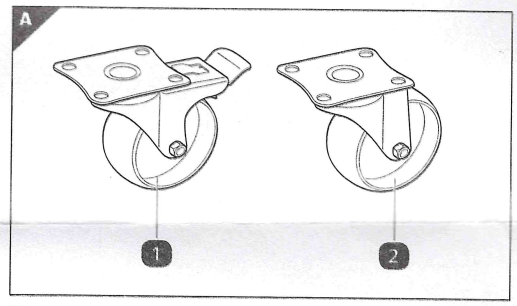

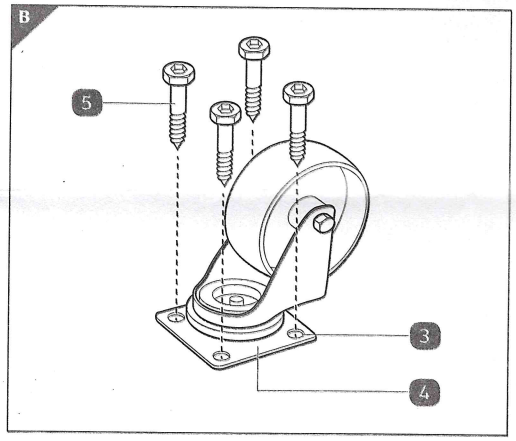

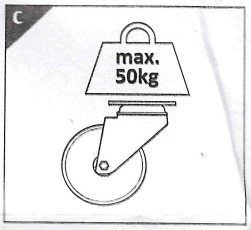

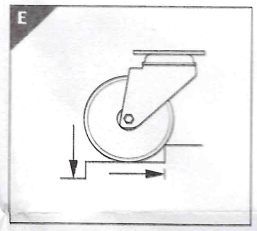

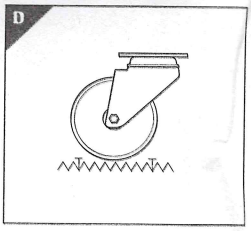

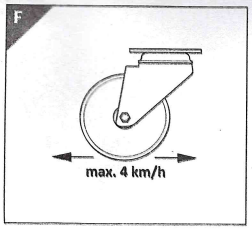

Pack contents/device parts

1. Swivel castor with brake, 2×
2. Swivel castor, 2×
3. Mounting hole, 4× (per castor)
4. Mounting plate
5. Screws (M8), 4× (per castor, not provided)

Mounting the castors

1. Remove the packaging material and check the product contents (see **Fig. A**).
2. Place the firm board or the furniture upside down so that the bottom side is facing upwards.
3. Clean the areas (four corners are highly recommended) where you would like to mount the castors. Make sure these areas are free from grease and dust.
4. Align a pair of swivel castors 2 first, and ther the remaining swivel castors with brake 1.
5. Secure the castors to the board or the bottom of the furniture with screws 5 through the mounting holes 3 of each mounting plate 4 (see **Fig. B**)
6. Turn the board or the furniture over.
   The castors are now ready for use.

Cleaning and maintenance

- Do not use any aggressive cleaners, sharp or metallic cleaning utensils such as knives, hard putty knives and the like. They may damage the surfaces of the castors.
- Clean the castors with a damp cloth.
- Let the castors dry completely.

Storage

- All castors must be completely dry before storage. Then store them in a dry place.
- Store the castors safely out of the reach of children.

Technical data

Model:	CS16B
Product code:	94700
Dimensions	
-castors:	ø 7.5 cm × 2.8 cm
-mounting plates:	7 cm × 6.0 cm
-plate strength:	2 mm
-screw hole on plate:	ø 8.9 mm
-total height:	9.95 cm
Weight	
-swivel castor:	297 g (+/– 5 g)
-swivel castor with brake:	348 g (+/– 5 g)
Loading capacity	
-total:	150 kg
-each castor:	50 kg

Disposal

Disposal of packaging

- Sort the packaging before you dispose of it. Dispose of cardboard and carton as waste paper and foils via the recyclable material collection service.

Disposing of the castors

- Should the castors no longer be capable of being used at some point in time, dispose of them in accordance with the regulations in force in your city or state.

ALDI guarantees that our exclusive brand products are developed to our stringent quality specifications. If you are not entirely satisfied with this product, please return it to the nearest ALDI store within 60 days from the date of purchase, for a full refund or replacement.